USB Conn.

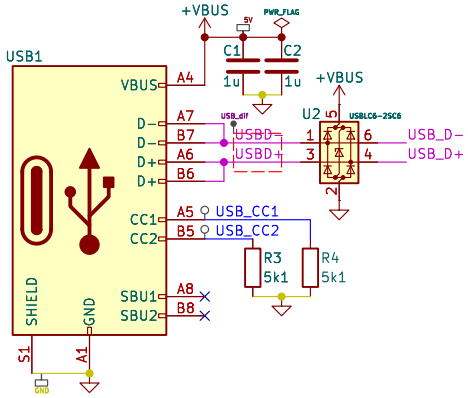

3V3 LDO

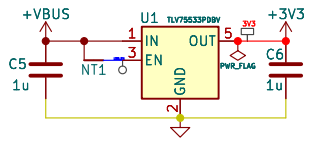

Indicators

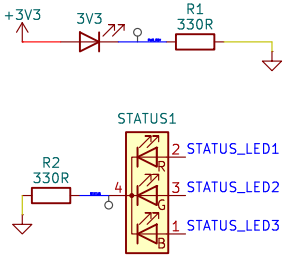

IMU

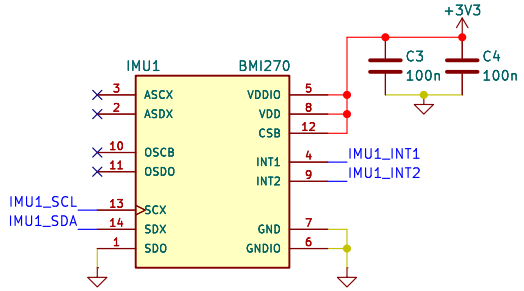

CAN Conn.

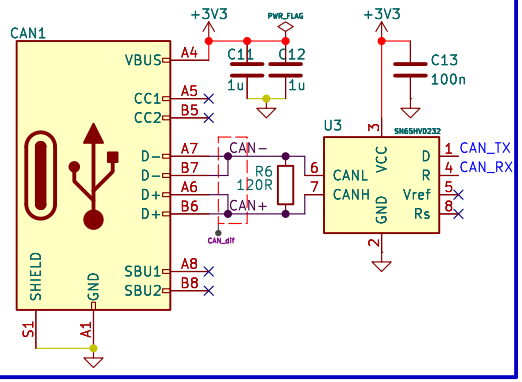

ESP32_S3

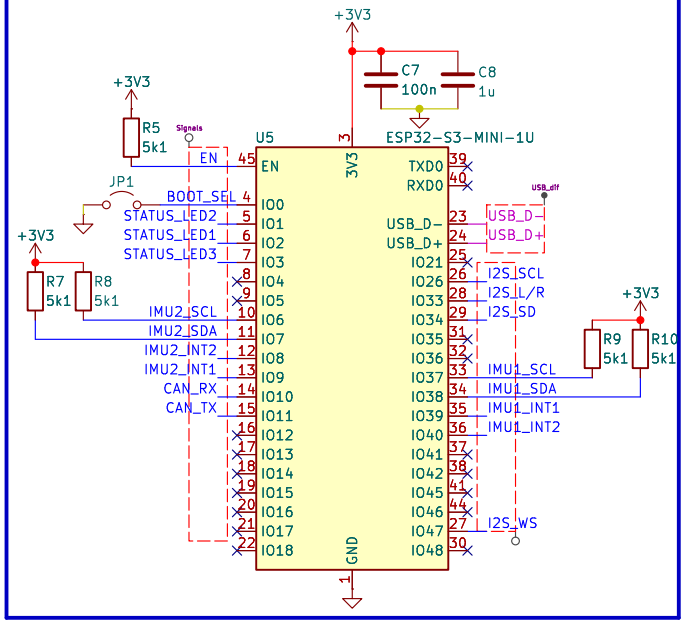

Mic. Module

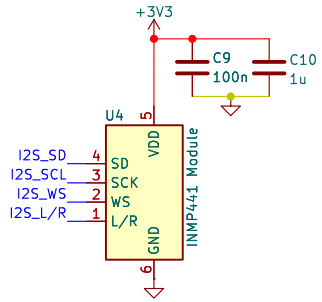

IMU2 Conn.

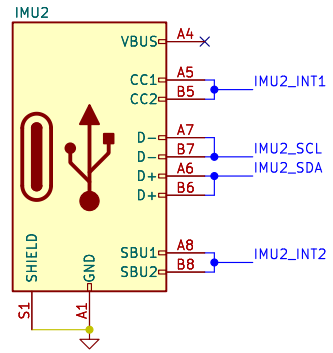

Mounting Holes

Sheet: /
File: WheelChair_Controller.kicad_sch

Title:

Size: A4	Date:	Rev:
KiCad E.D.A. 9.0.6		Id: 1/1